CWI LIGHTING

BRIGHTER LIVING. SIMPLIFIED.

PROJECT: _____

FIXTURE TYPE: _____

LOCATION: _____

CONTACT/PHONE: _____

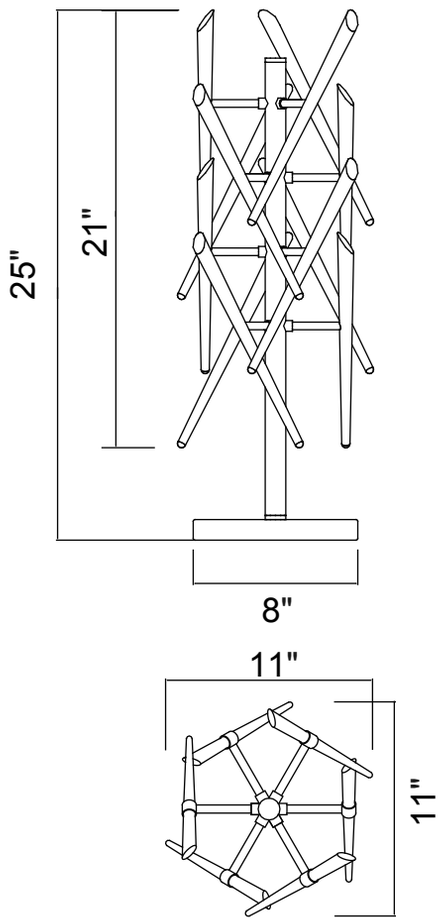

Item	1154T25-3-601	Shade Color	- - - - - -	Lumens	- - - - - -
Collection	ICICLE	Min Assembled Height	25"	Light Source	G9
Category	Table Lamp	Max Assembled Height	- - - - - -	Bulb Info.	3x40W
Finish	Chrome	Width	11"	Included	- - - - - -
Glass	Clear	Length	11"	Dimmable	Yes
Crystal	- - - - - -	Extension Wall Mounts	- - - - - -	Colour Temp	- - - - - -
Acrylic	- - - - - -	Input	120V AC,60HZ,AC	Weight	9.92 Lbs

CWI Lighting
140 Steelcase Rd W
Markham, ON L3R 3J9
Canada

CWI Lighting
295 Fire Tower Dr
Tonawanda, NY 14150
USA

Dallas Showroom: #4707
2100 N Stemmons Fwy
Dallas, TX 75207
USA

High Point Showroom: #IH108
210 E Commerce Ave
High Point, NC 27260
USA

Contact Info: Toll: 1-877-564-6034 | www.cwilighting.com | info@cwilighting.com