CWI LIGHTING

BRIGHTER LIVING. SIMPLIFIED.

PROJECT: _____

FIXTURE TYPE: _____

LOCATION: _____

CONTACT/PHONE: _____

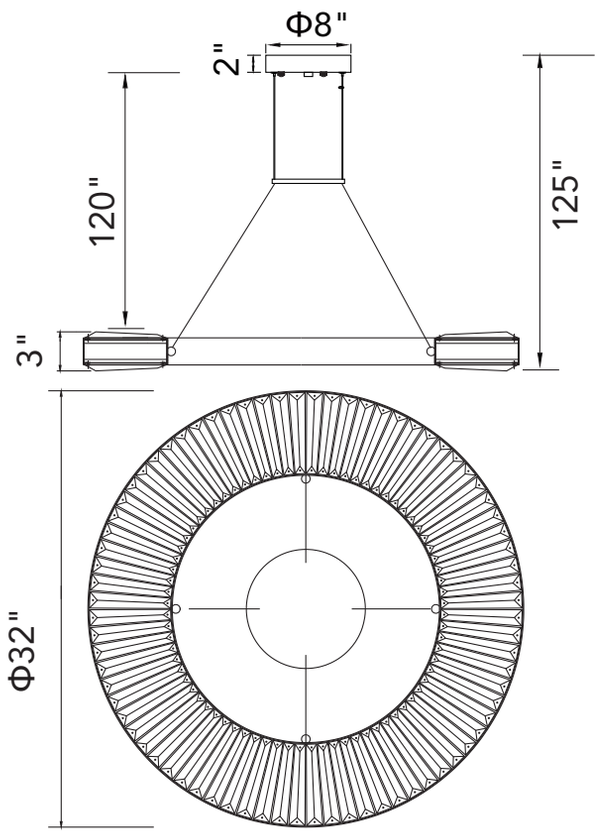

Item	1219P32-1-625	Shade Color	- - - - - -	Lumens	4160
Collection	BJOUX	Min Assembled Height	17"	Light Source	Integrated LED
Category	Chandelier	Max Assembled Height	125"	Bulb Info.	80W
Finish	Sun Gold	Width	32"	Included	Yes
Glass	- - - - - -	Length	- - - - - -	Dimmable	Yes
Crystal	Clear	Extension Wall Mounts	- - - - - -	Colour Temp	3000K
Acrylic	- - - - - -	Input	120V AC,60HZ,AC	Weight	41.8 Lbs

CWI Lighting
140 Steelcase Rd W
Markham, ON L3R 3J9
Canada

CWI Lighting
295 Fire Tower Dr
Tonawanda, NY 14150
USA

Dallas Showroom: #4707
2100 N Stemmons Fwy
Dallas, TX 75207
USA

High Point Showroom: #IH108
210 E Commerce Ave
High Point, NC 27260
USA

Contact Info: Toll: 1-877-564-6034 | www.cwilighting.com | info@cwilighting.com