CWI LIGHTING

BRIGHTER LIVING. SIMPLIFIED.

PROJECT: _____

FIXTURE TYPE: _____

LOCATION: _____

CONTACT/PHONE: _____

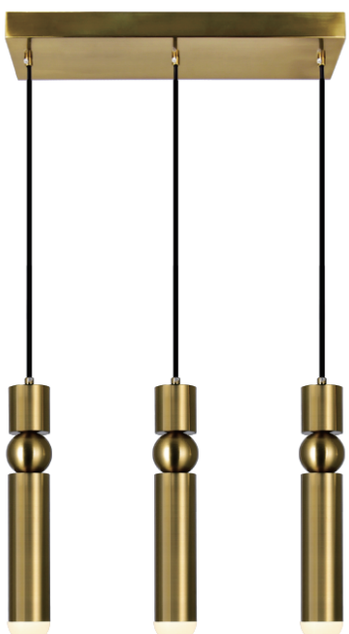

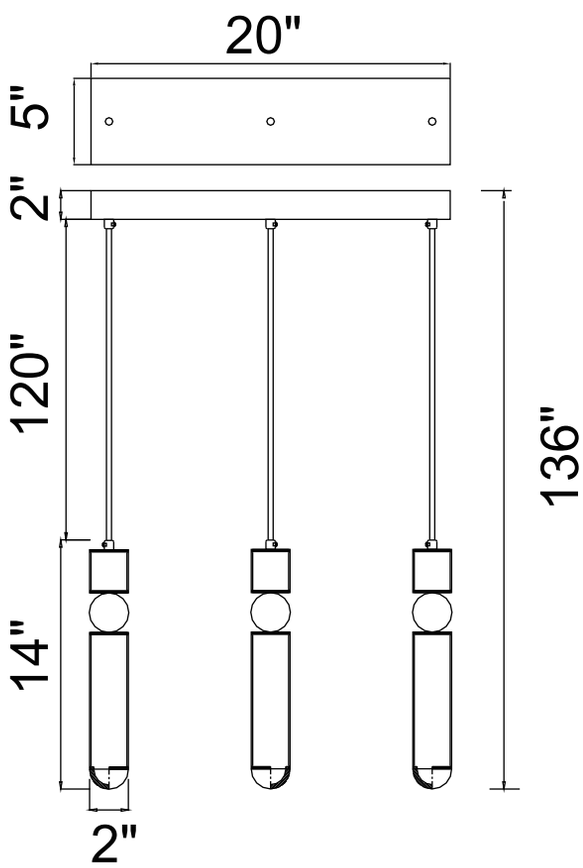


| | | | | | |
|---|---|---|---|---|---|
| Item | 1225P20-3-625 | Shade Color | - - - - - - | Lumens | 780 |
| Collection | CHIME | Min Assembled Height | 16" | Light Source | Integrated LED |
| Category | Chandelier | Max Assembled Height | 136" | Bulb Info. | 15W |
| Finish | Brass | Width | 20" | Included | Yes |
| Glass | - - - - - - | Length | 5" | Dimmable | Yes |
| Crystal | - - - - - - | Extension Wall Mounts | - - - - - - | Colour Temp | 3000K |
| Acrylic | Frosted | Input | 120V AC,60HZ,AC | Weight | 8.14 Lbs |

**CWI Lighting**
140 Steelcase Rd W
Markham, ON L3R 3J9
Canada

**CWI Lighting**
295 Fire Tower Dr
Tonawanda, NY 14150
USA

**Dallas Showroom**: #4707
2100 N Stemmons Fwy
Dallas, TX 75207
USA

**High Point Showroom**: #IH108
210 E Commerce Ave
High Point, NC 27260
USA

**Contact Info:** Toll: 1-877-564-6034 | www.cwilighting.com | info@cwilighting.com