CWI LIGHTING
BRIGHTER LIVING. SIMPLIFIED.

PROJECT: _____
FIXTURE TYPE: _____
LOCATION: _____
CONTACT/PHONE: _____

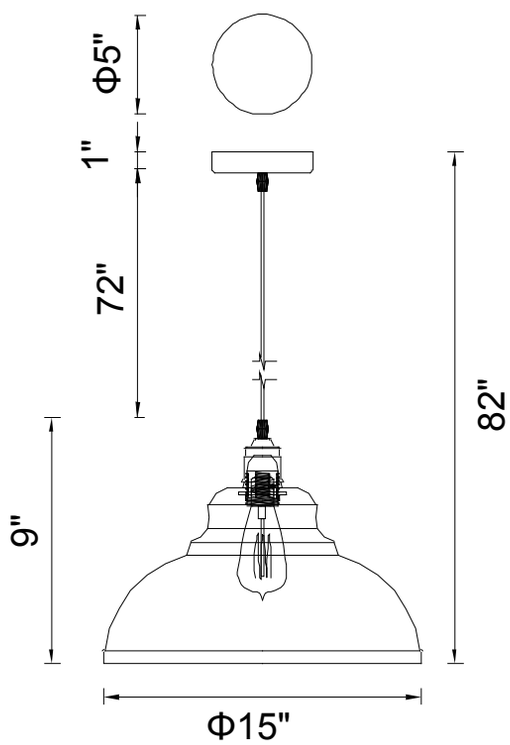

Item	9612P15-1-128	Shade Color	Antique Copper	Lumens	- - - - - -
Collection	VOGEL	Min Assembled Height	11"	Light Source	E26
Category	Pendant	Max Assembled Height	82"	Bulb Info.	1x60W
Finish	Antique Copper	Width	15"	Included	- - - - - -
Glass	- - - - - -	Length	- - - - - -	Dimmable	Yes
Crystal	- - - - - -	Extension Wall Mounts	- - - - - -	Colour Temp	- - - - - -
Acrylic	- - - - - -	Input	120V AC,60HZ,AC	Weight	5.51 Lbs

CWI Lighting
140 Steelcase Rd W
Markham, ON L3R 3J9
Canada

CWI Lighting
295 Fire Tower Dr
Tonawanda, NY 14150
USA

Dallas Showroom: #4707
2100 N Stemmons Fwy
Dallas, TX 75207
USA

High Point Showroom: #IH108
210 E Commerce Ave
High Point, NC 27260
USA

Contact Info: Toll: 1-877-564-6034 | www.cwilighting.com | info@cwilighting.com