CWI LIGHTING
BRIGHTER LIVING. SIMPLIFIED.

PROJECT: _____
FIXTURE TYPE: _____
LOCATION: _____
CONTACT/PHONE: _____

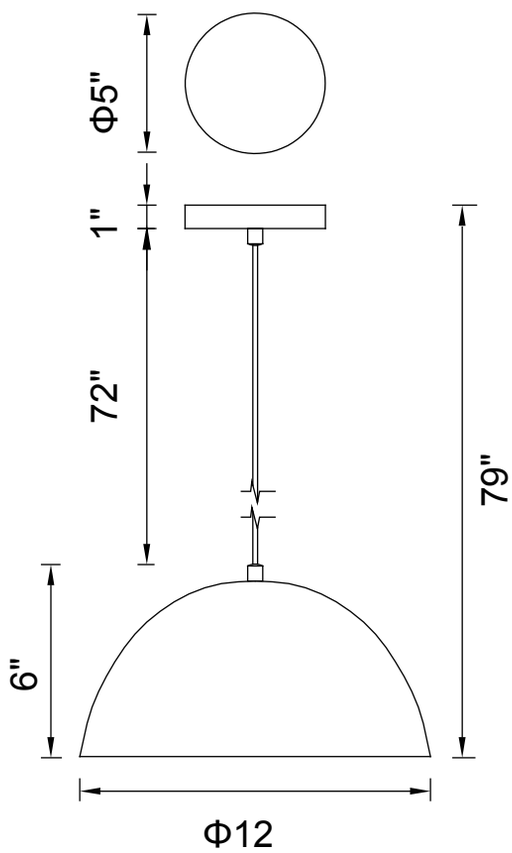


| | |
|---|---|
| Item | 9629P12-1-101 |
| Collection | MODEST |
| Category | Pendant |
| Finish | Black |
| Glass | - - - - - - |
| Crystal | - - - - - - |
| Acrylic | - - - - - - |

| | |
|---|---|
| Shade Color | Black |
| Min Assembled Height | 8" |
| Max Assembled Height | 79" |
| Width | 12" |
| Length | - - - - - - |
| Extension Wall Mounts | - - - - - - |
| Input | 120V AC,60HZ,AC |

| | |
|---|---|
| Lumens | - - - - - - |
| Light Source | E26 |
| Bulb Info. | 1x60W |
| Included | - - - - - - |
| Dimmable | Yes |
| Colour Temp | - - - - - - |
| Weight | 3.3 Lbs |


**CWI Lighting**
140 Steelcase Rd W
Markham, ON L3R 3J9
Canada

**CWI Lighting**
295 Fire Tower Dr
Tonawanda, NY 14150
USA

**Dallas Showroom**: #4707
2100 N Stemmons Fwy
Dallas, TX 75207
USA

**High Point Showroom**: #IH108
210 E Commerce Ave
High Point, NC 27260
USA

**Contact Info:** Toll: 1-877-564-6034 | www.cwilighting.com | info@cwilighting.com